Garden Cottage,
3x3, 4x4 and 5x5
Ht 2,20 and 2,50 m

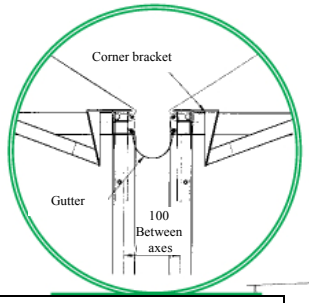

Juxtaposed structures

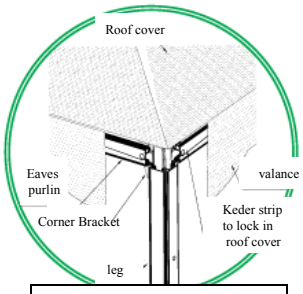

Roof tension

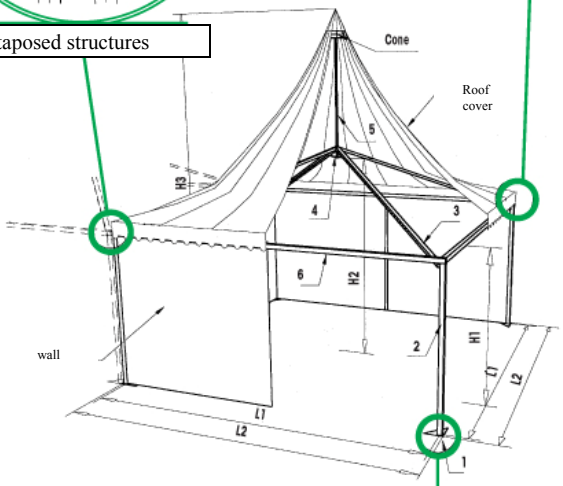

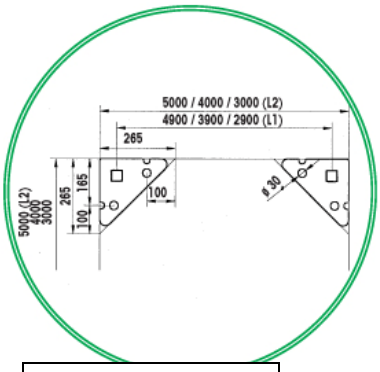

Base plates

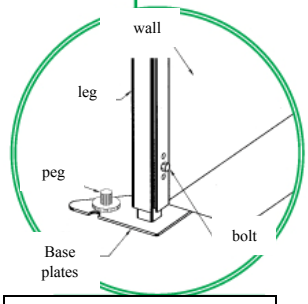

Wall tension

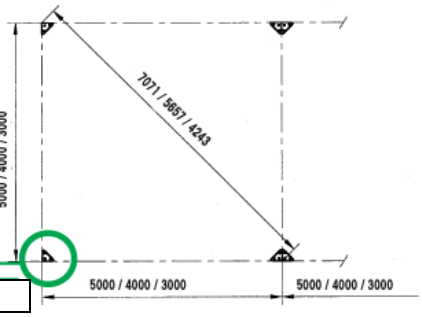

Setting out

Specifications		3x3 m		4x4 m		5x5 m	
		ht 2,20m	ht 2,50m	ht 2,20m	ht 2,50m	ht 2,20m	ht 2,50m
Span	L2	3	3	4	4	5	5
Distance between leg centres	L1	2,9	2,9	3,9	3,9	4,9	4,9
External ridge height	H3	3,94	4,24	5,04	5,34	5,25	5,55
Internal ridge height	H2	2,6	2,9	2,84	3,14	3,06	3,36
Eaves height	H1	2,14	2,44	2,14	2,44	2,14	2,44
Long side bay	L2	3	3	4	4	5	5
Base Plate	1	237x237	237x237	237x237	237x237	237x237	237x237
Leg	2	63x63	63x63	63x63	63x63	63x63	63x63
Roof Brace	3	40x40	40x40	40x40	40x40	40x40	40x40
Central junction	4						
Cone + extension	5						
Eaves purlin	6	63x63	63x63	63x63	63x63	63x63	63x63

Erection/dismantling	3x3 m	4x4 m	5x5 m
Number of people	2	2	2
Total duration of erection	20 mn	30 mn	40 mn
vehicles + duration			
Necessary equipment not provided	2 no. 3m step ladders, 1 sledgehammer, 1 crow bar		
Time saved for dismantling	30%		

** exemples details and explanations page 112*

Anchoring and weighting	Anchoring			Weighting	
	Uplift force kg	Coef.	Number of pegs	Uplift force kg	Coef.
Structure 3x3 m	210	2	2 lg 500	170	1,65
Structure 4x4 m	225	2	2 lg 500	185	1,65
Structure 5x5 m	350	2	2 lg 500	290	1,65

** exemples details and explanations page 112*

Load Bearing	Height 2,20 and 2,50
With snow	F = 0 kg
Without snow	F = 50 kg

** exemples details and explanations page 112*

Packaging	Frame			Covers			Example *
	3x3	4x4	5x5	3x3	4x4	5x5	5x5x2,5
Weight without packaging ht 2,20 m (kg)	82	93	105	35	51	70	
Weight without packaging ht 2,50 m (kg)	85	95	107	40	56	75	182
Number of pallets - covers 0,80x1,20x0,60 m							1
Number of frame bundles 2,90/3,90/4,90x0,35x0,45 m							1
Number of boxes 0,60x0,40x0,35 m							1
Longest piece : Eaves purlin 2900/3900/4900 mm							
Description of packaging, Covers in bags on pallet, Frame in bundles accessories in boxes							

** Calculated on basis of complete structures, not mixed*

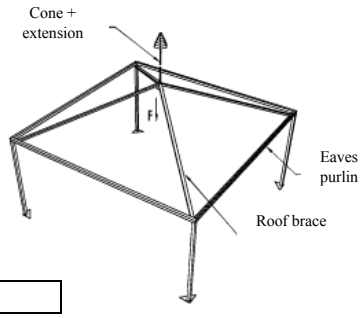

Load Bearing

CATALOGUE CTS 2005